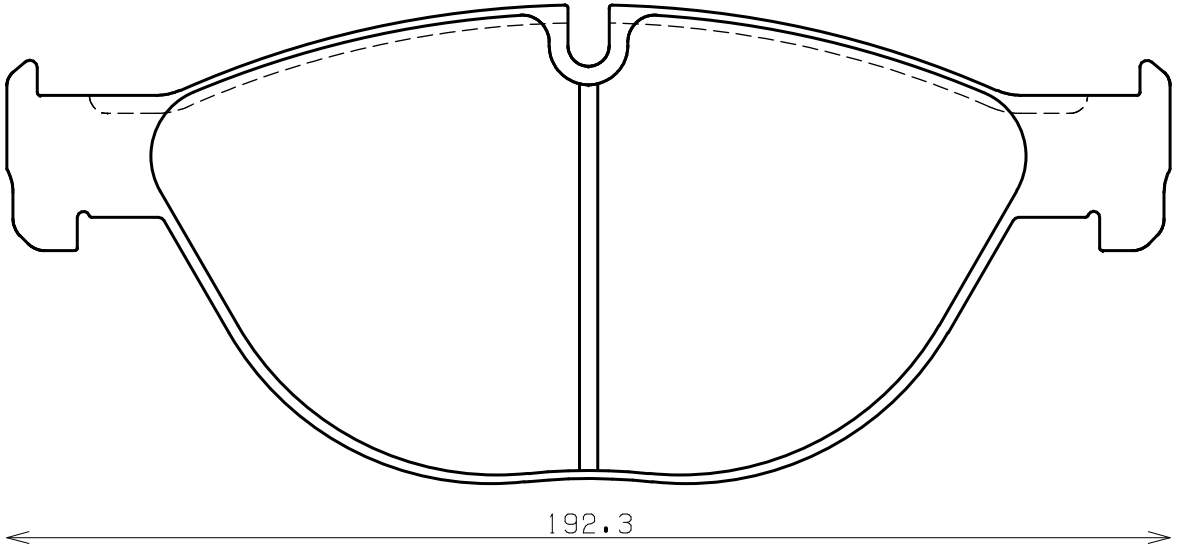

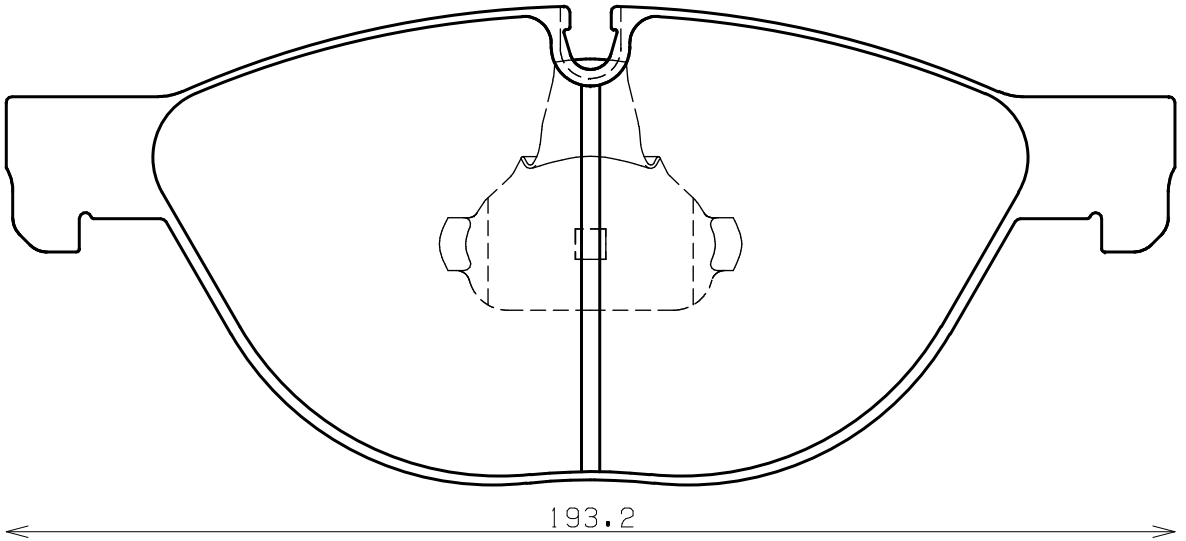

Ewig
for import car

Thickness : 18.5

Part No : EIP210