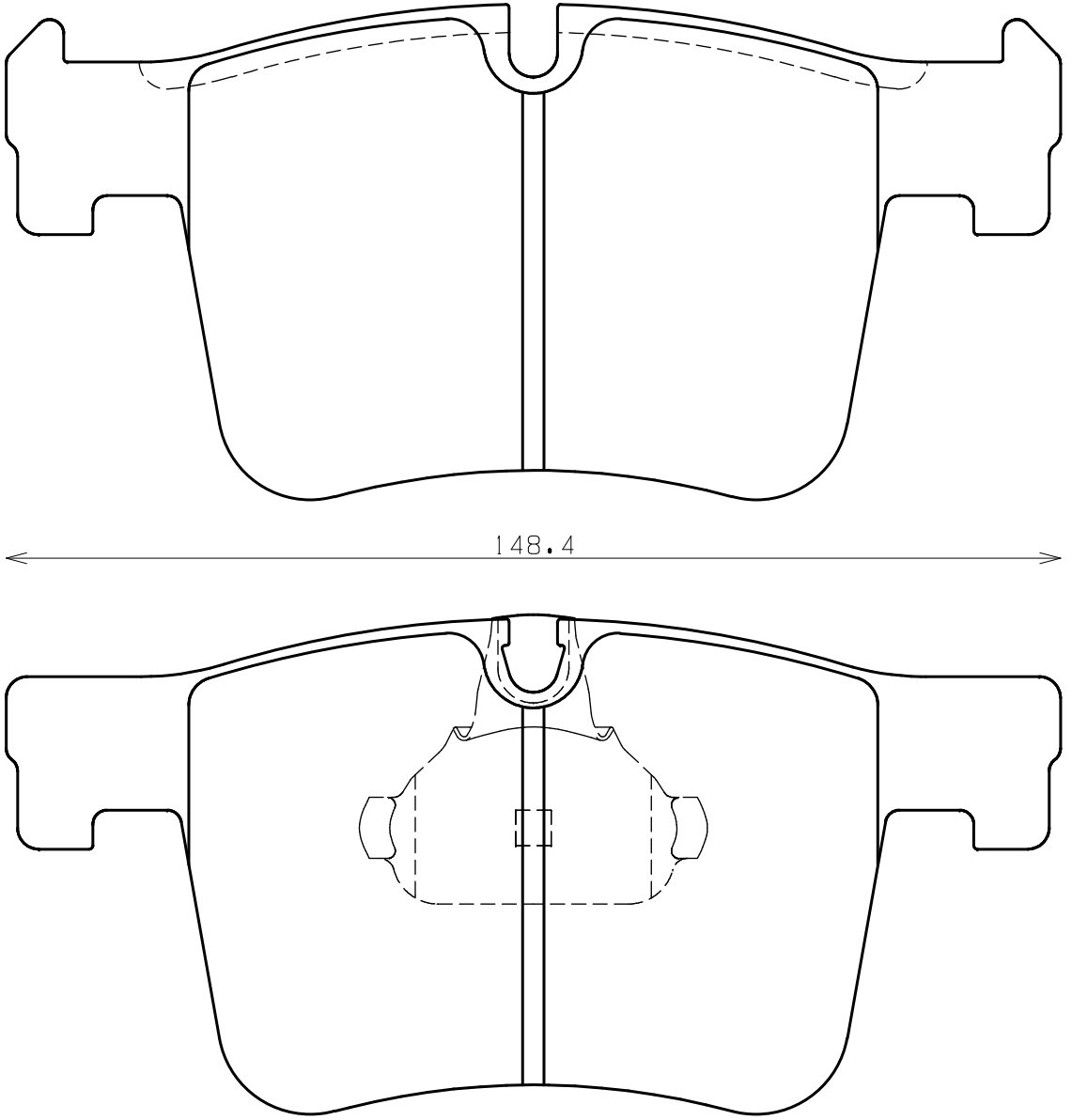

Ewig
for import car

Thickness : 19.5

Part No : EIP212