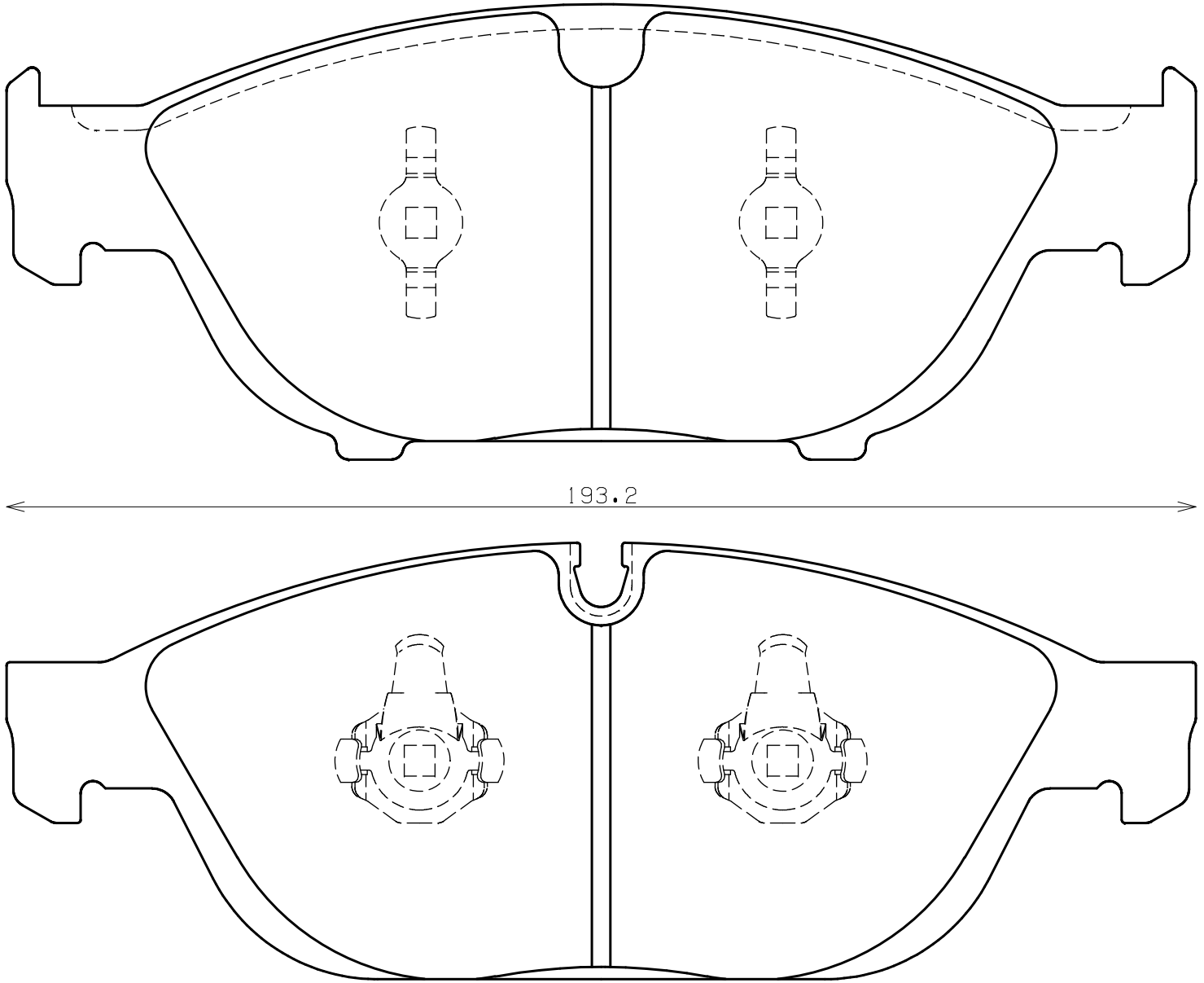

Ewig
for import car

Thickness : 20.0

Part No : EIP228