Ewig
for import car

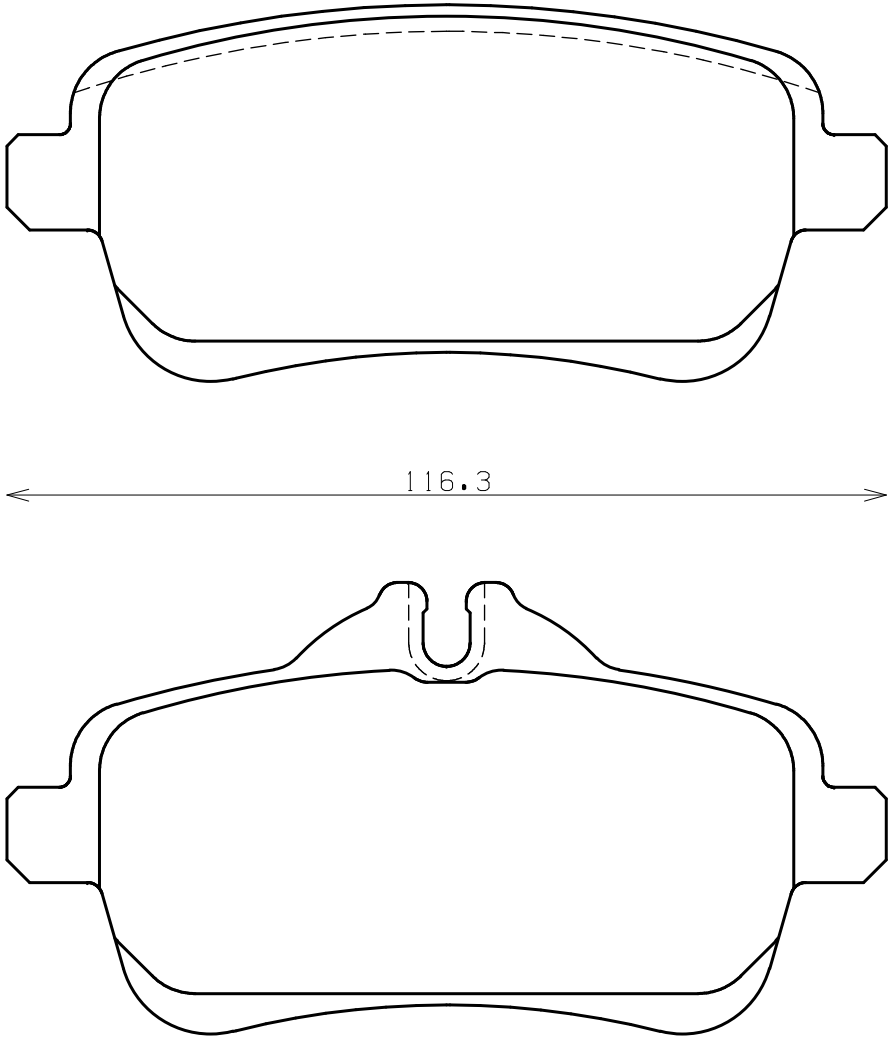

Thickness : 18.5

Part No : EIP231