Ewig
for import car

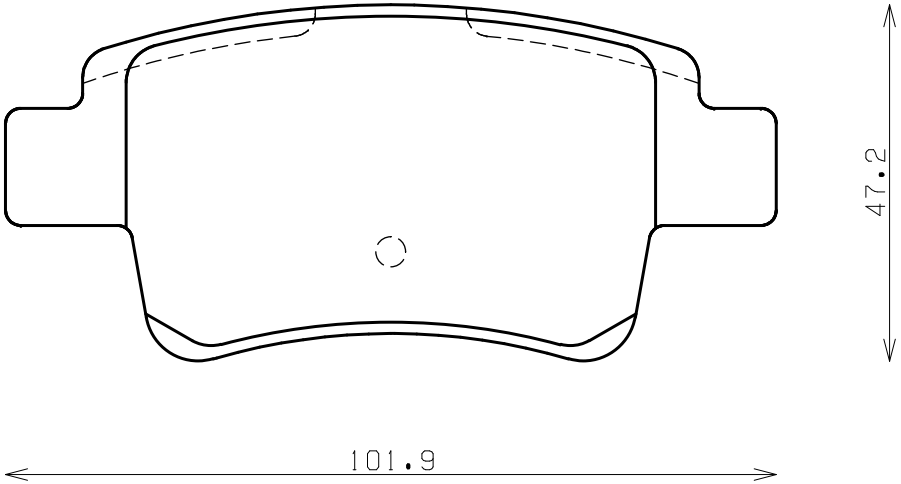

Thickness : 17.5

Part No : EIP233