Ewig
for import car

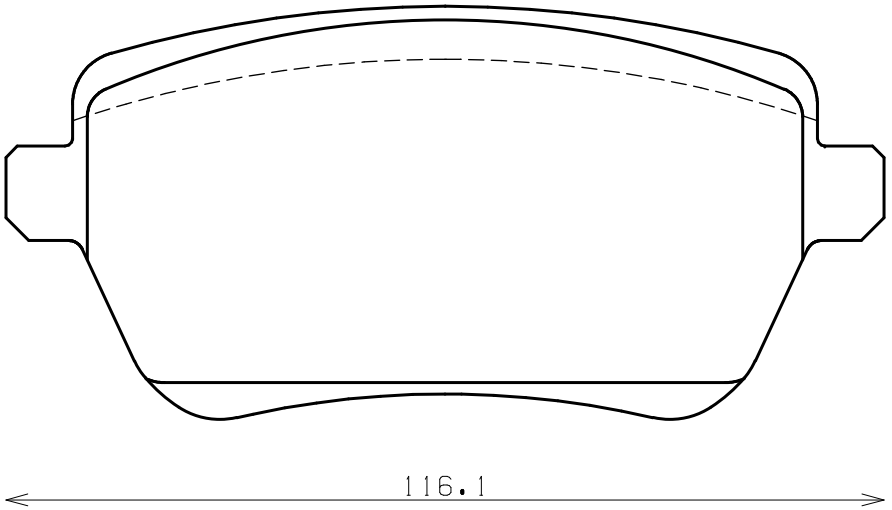

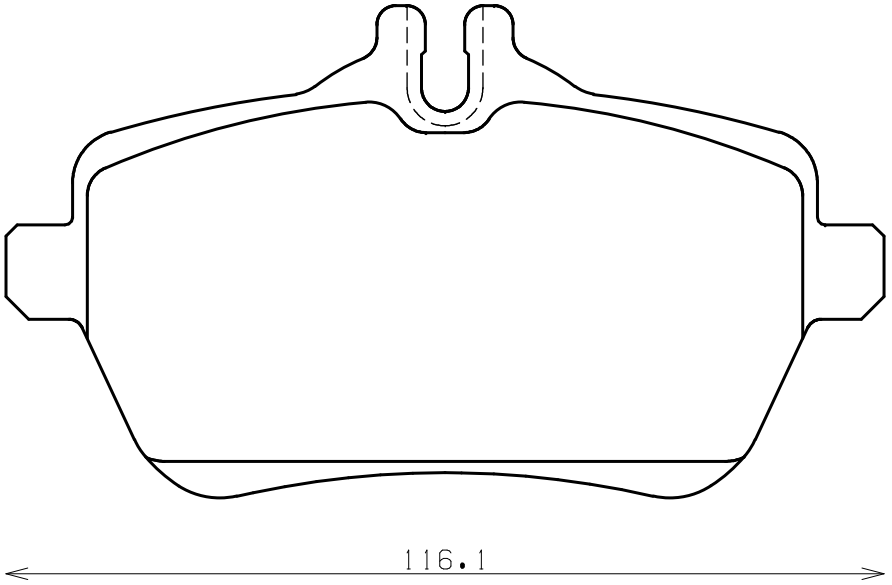

Thickness : 18.5

Part No : EIP235