ENDLESS®

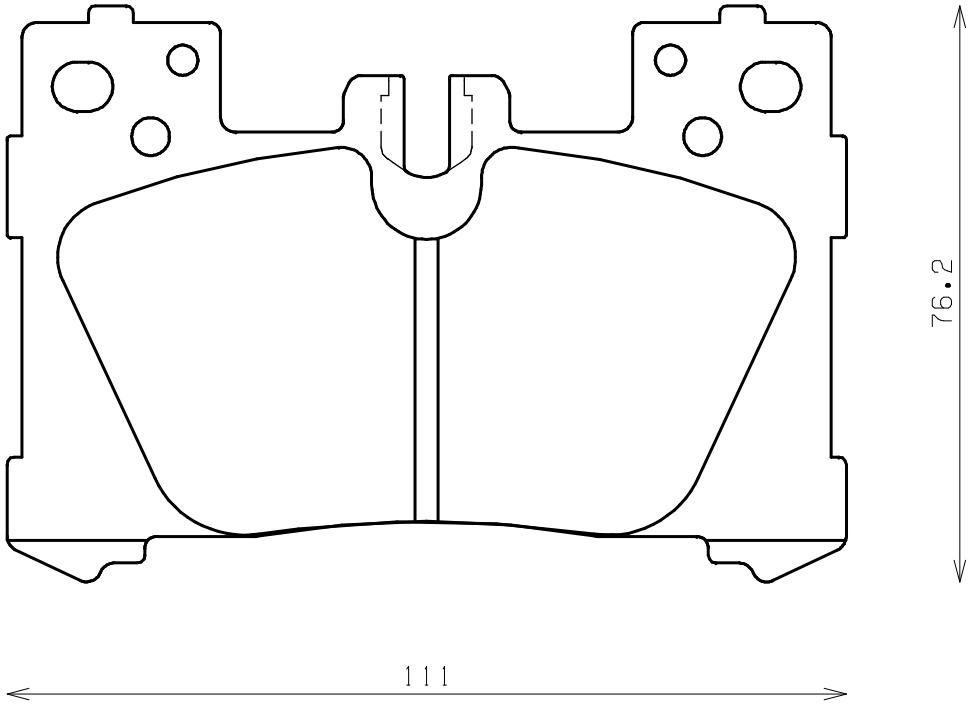

Thickness : 16.5

Part No : EP519