Ewig
for import car

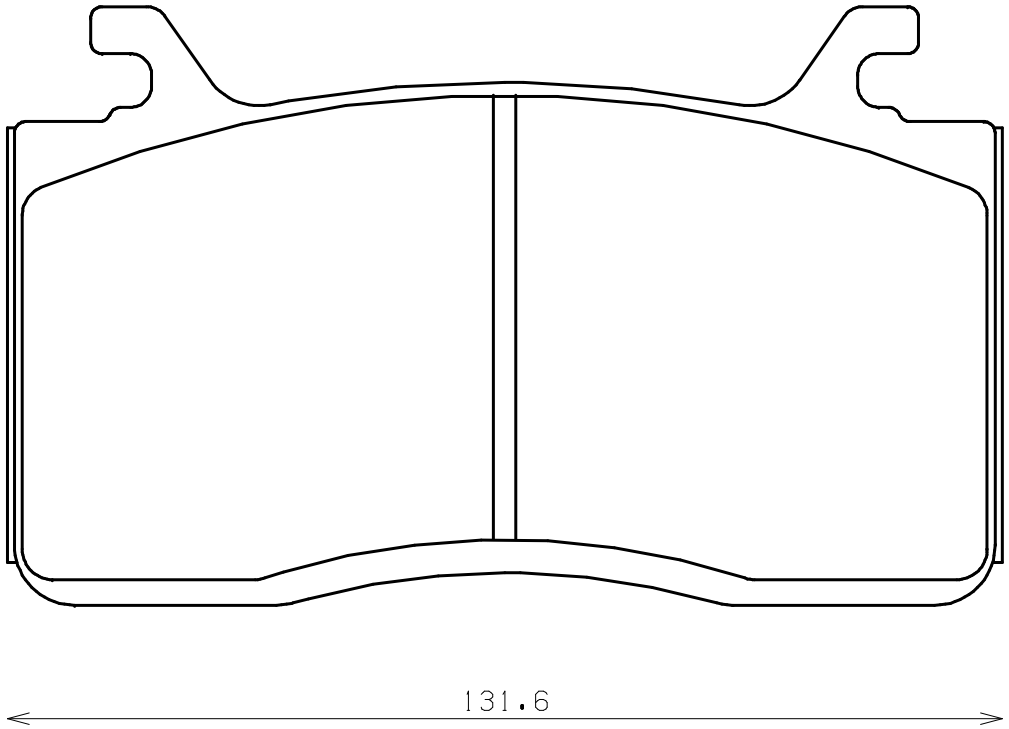

Thickness : 16.0

Part No : EIP290