Ewig
for import car

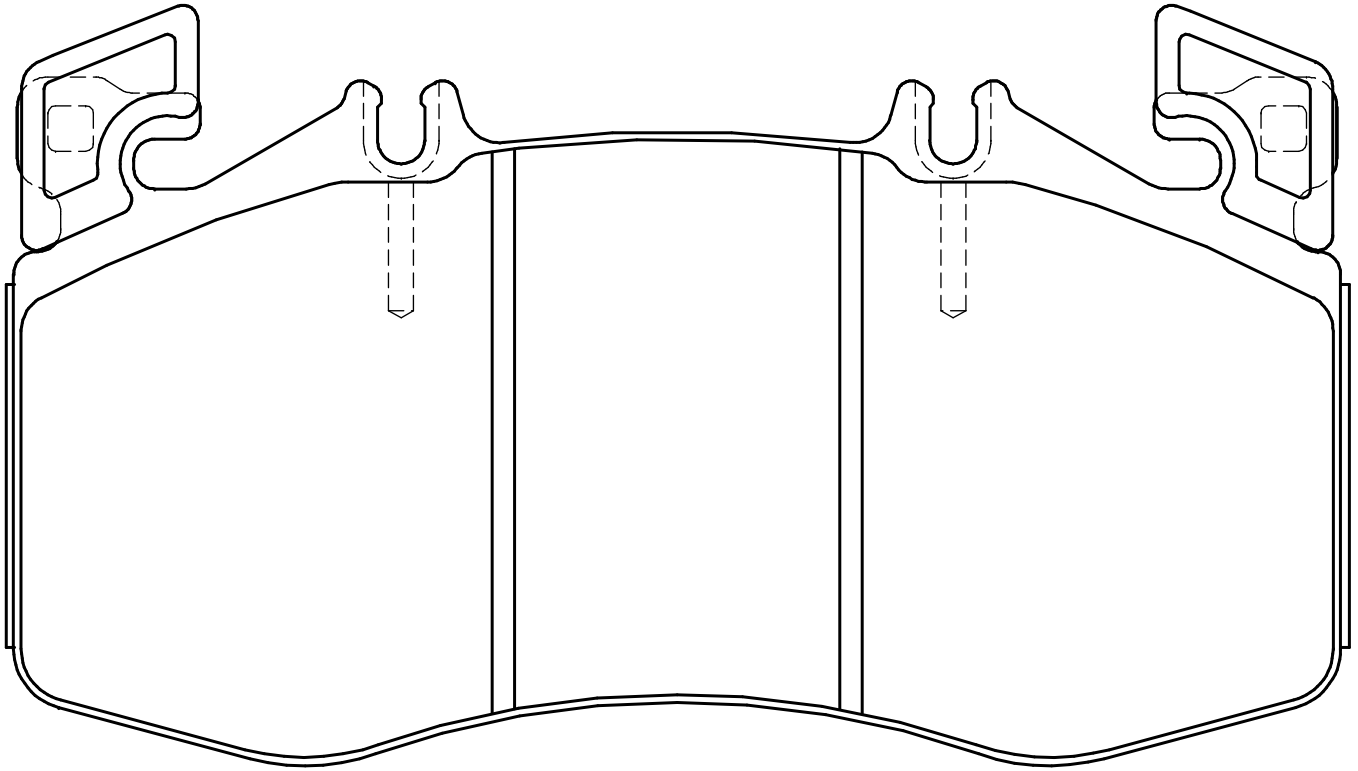


Thickness : 16.5

Part No : EIP308