Caliper Brand : ADVICS

ENDLESS

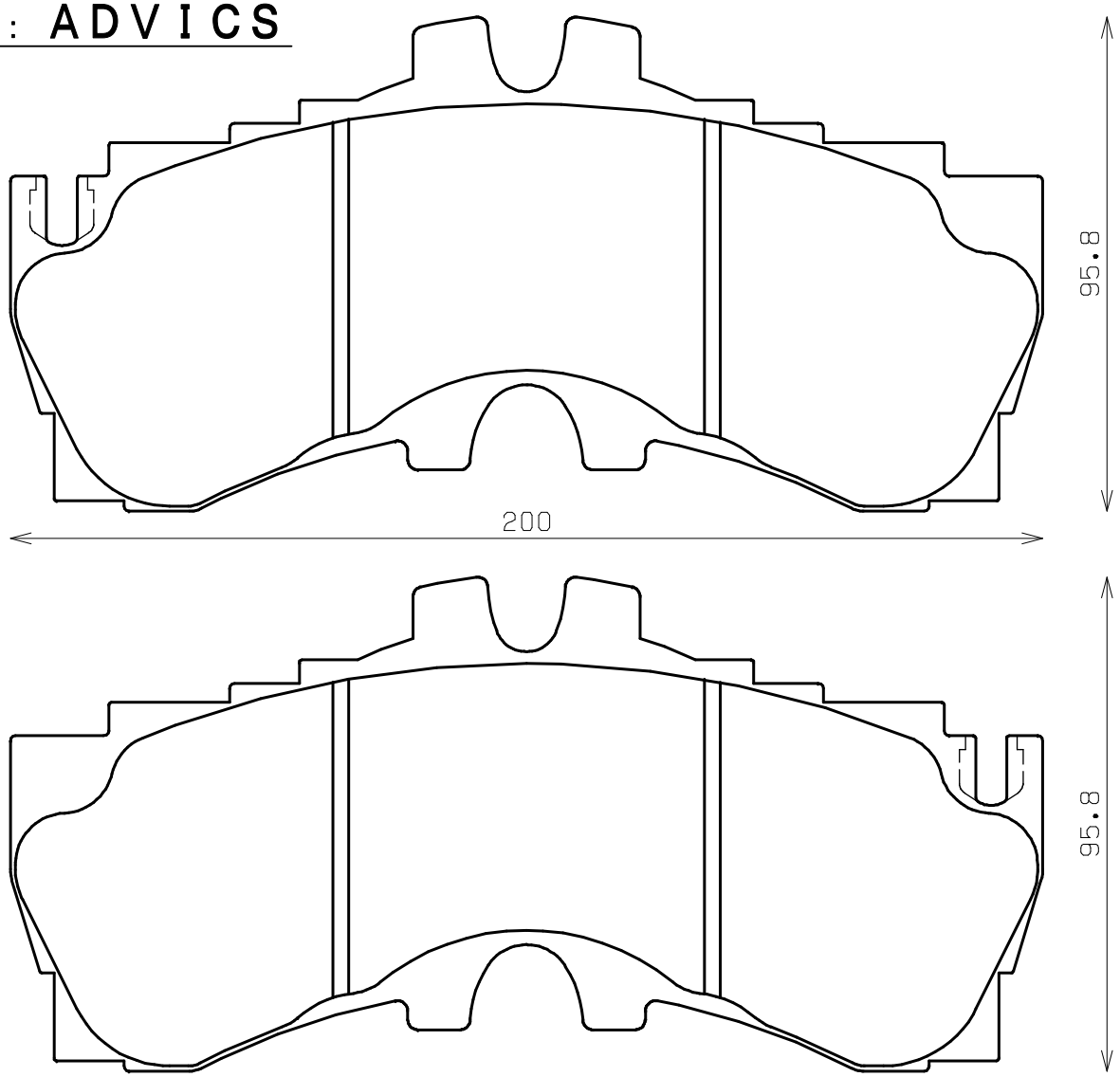

Thickness : 17.5

Part No : RCP184