ENDLESS

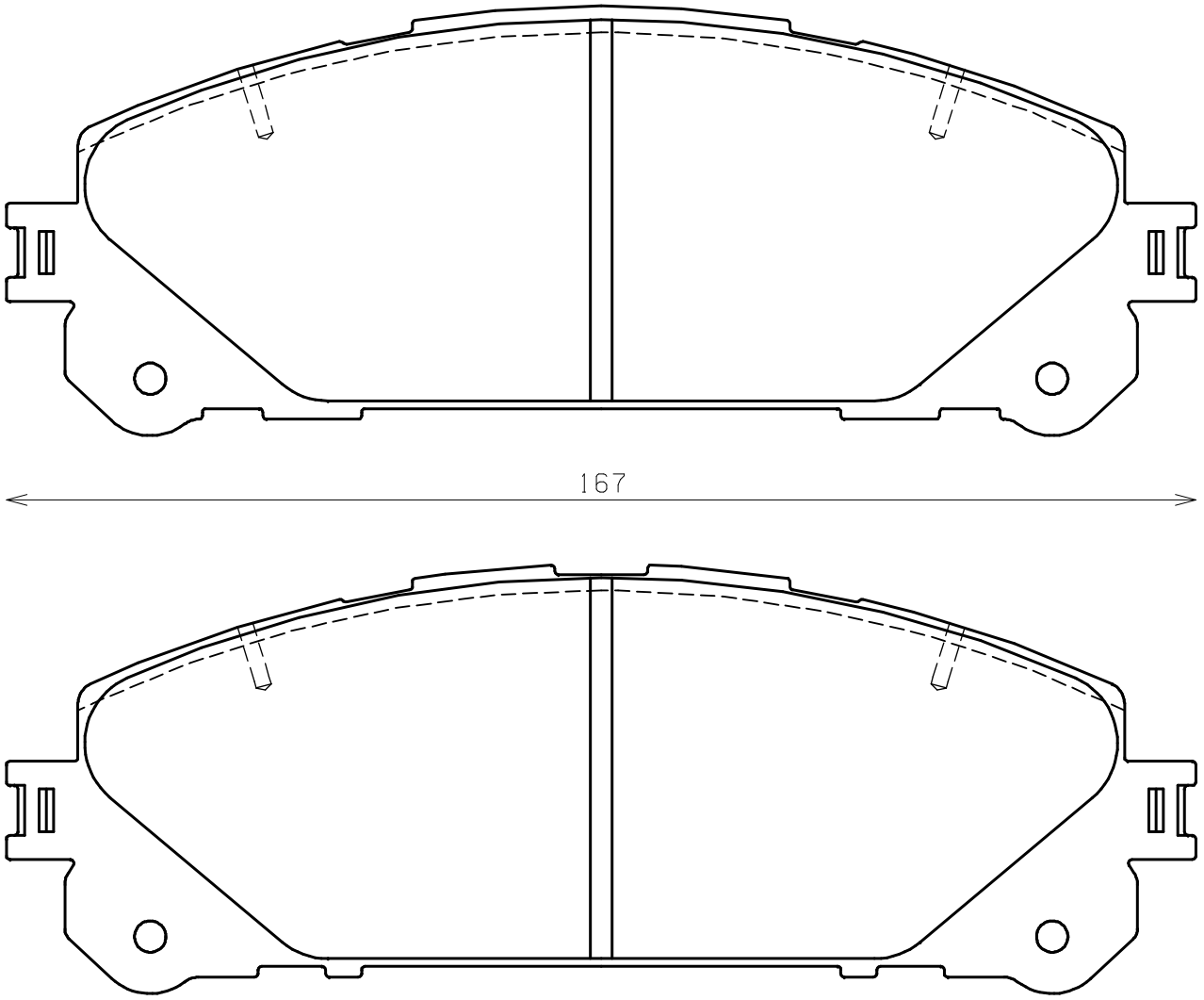

Thickness : 17.5

Part No : EP584